APPLICATION OF A CIRCULAR ARCH FOR SPHERICAL NEAR-FIELD ANTENNA MEASUREMENTS FROM 1 TO 60 GHZ

Doren W. Hess(1) , **Jeffrey A. Fordham**(2), **Scott Pierce**(3), **Evan Langman**(4)

MI Technologies
1125 Satellite Boulevard, Suite 100
Suwanee, GA 30024-4629
United States of America
Email: (1) dhess@mi-technologies.com, (2) jfordham@mi-technologies.com
(3) spierce@mi-technologies.com(4) elangman@mi-technologies.com

ABSTRACT

MI Technologies has developed and constructed two of a new generation of spherical near-field ranges that expand the regime of measurement requirements to which the spherical near-field technique can be applied. This evolutionary design permits measurements to be made on large apertures -- up to 10.0 m (32 ft) and at frequencies up to 60 GHz under conditions of constant gravity loads over 4π SR of coverage. Here we report on developments leading to a spherical near-field scanning system that has been built and realized for apertures up to 3.66 m (12 ft) and frequencies between 2.0 and 45 GHz which corresponds to an electrical size of 550 wavelengths.

Keywords: Near-Field Antenna Measurements, Spherical Near-Field Scanning, Millimeter-Wave Antenna Measurement

1. INTRODUCTION

Certain antennas cannot readily be re-oriented in space as a pattern test is conducted. Consequently, we are forced to re-consider past practices. [1],[2] when designing test equipment to address the testing of millimeter wave antennas and gravity-sensitive antennas.

A typical case is a spacecraft antenna designed for a weightless environment that must be tested before launch in conditions where gravity distorts the structure. Often a “strongback” supporting strtucture is used to assist in the measurement by preventing relative movement of antenna parts. This approach can become unwieldy and also interfere electromagnetically with testing. Also, millimeter-wave antennas, even in the best of circumstances, often cannot be re-oriented, due to the mechanical distortion caused by gravity. The ability to keep an antenna in fixed orientation relative to gravity as the pattern is measured can offer a significant advantage.

One option is to employ planar near-field scanning with a horizontal scan plane. This has proven to yield good results but only over a limited set of coverage angles. Add to this the requirement to measure backlobes and one has a difficult test problem.

To address this need, MI Technologies has developed and constructed two of a new generation of spherical near-field test ranges that expand the regime of measurement requirements that can be addressed. Here we describe arch positioners for two ranges of this type. We emphasize the operational design of the arch and then show some of the preliminary antenna measurement results achieved so far. Two critical aspects are the active probe position error correction for accuracy and continuous azimuthal motion for improved data acquisition speed.

2. SPEED AND ACCURACY

The key to accurate measurements at millimeter-wave frequencies is control of probe position errors in all three spherical coordinates -- the radial coordinate as well as the azimuthal and polar angular coordinates. This correction was implemented with a multi-axis translation stage that carried the probe and traveled along a vertical, fixed, half-circle arc within the chamber. The arch positioner enabled 180 degrees of probe travel in the polar angular coordinate. The azimuthal angular coordinate motion was realized with a vertical axis rotary positioner whose axis intersected and was orthogonal to the virtual elevation axis of the arc.

To achieve the rapid speed of data acquisition for large antennas, the azimuthal scan axis was kept in continuous motion – even during the intervals of time when the arc motion was being stepped. Acquisition software was employed that enabled the continuous motion and registered the data increments so that proper placement of the recorded data could be realized before the remaining data was processed.

---

3. STRUCTURE OF THE ARCH

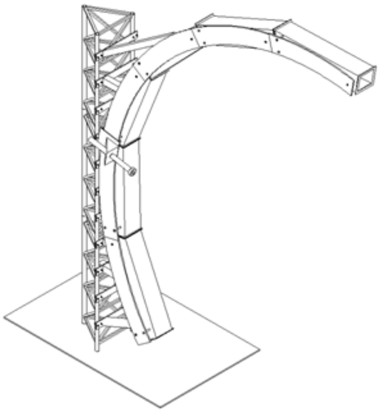

Fig. 1. Early View of Basic Arch Structure

The fundamental concept of the arch is depicted above in Fig. 1, which shows an early mechanical schematic. A steel tower supports a segmented arch of tubular steel; that in turn supports a guide track upon which a carriage rides. The arc of the carriage motion is formed by high precision, steel guide track segments. Each track segment is independently mounted on the tubular steel structure. Detailed structural design studies led to the cantilevered support structure shown below in Fig. 2.

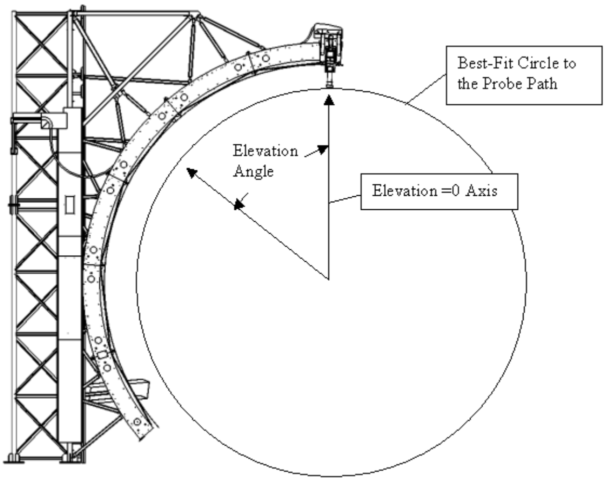

Fig. 2. Side View of Partial Arch Scanner

The semi-circular arch structure of the scanner is cantilevered from the tower using a series of tubular steel trusses and turnbuckles. Once the scanner has been aligned, the fasteners that hold these trusses and turnbuckles are left permanently in place.

Gross adjustments to the position/orientation of large zones of the circular arch structure are performed using the turnbuckles that form part of the scanner support structure. The turnbuckles that are oriented at an angle to the scan plane can be used to change the orientation of the guide track in and out of the scan plane. The turnbuckles at the top of the tower structure that are oriented parallel to the scan plane can be used to raise and lower the top of the guide track arc in order to change the composite shape of the arc.

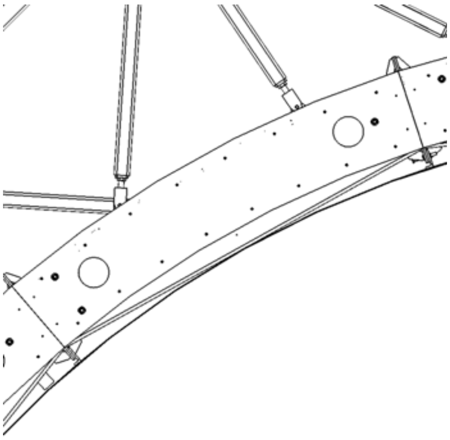

Fig. 3. Close-up View of a Guide Track Segment

Circularity, planarity and angular accuracy of the spherical scanner are brought into alignment by adjusting the position/orientation of the guide track segments. Each track segment is mounted via a set of three studs with spherical washers. Orientation of a particular track segment in the scan plane is accomplished by turning the nuts that hold the track segment on a stud. Adjustment in the scan plane is accomplished by moving the track within the free motion allowed by the grip of each stud.

4. THE ARCH CARRIAGE

The arch carriage travels on the guide track via hardened steel cam rollers. The probe carriage itself is fabricated in aluminum. Four larger rollers engage the edges of the guide track: The two outside rollers are hard-mounted to the carriage; the inner two rollers are sprung against the track so that the carriage maintains engagement with the track edges. Eight smaller rollers engage the front and back sides of the track; the front rollers are hard-mounted to the carriage while the back rollers are sprung against the track. The carriage drive system consists of a brushed, DC motor driving through a planetary reducer. The drive pinion engages a sector gear that mounts to the guide track. The motor is set up so that the forward direction corresponds to motion of the carriage from the top of the arch towards the bottom of the arch. This is consistent with the conventional polar angle, θ, of spherical near-field scanning theory. [2]

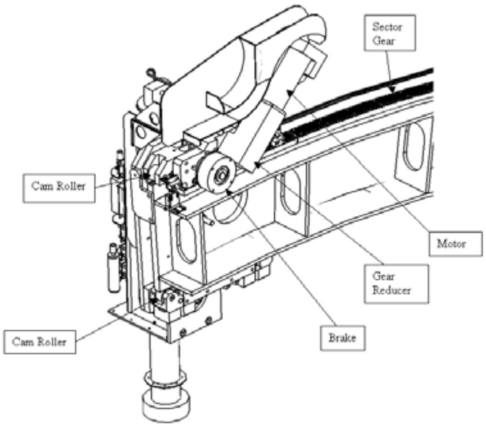

Fig. 4. Close-up View of Carriage and Rollers

The carriage is equipped with a “normally engaged” brake. This brake engages the sector gear through a load path that is independent of the drive system load path. The brake is actuated by a spring in such a manner that the brake is engaged whenever power to the carriage is off. Thus, any action that cuts power to the drive system (e.g. emergency stop) will cause the brake to be engaged.

This Series of Spherical Arch Scanners uses a linear encoder to provide position feedback to the position controller. The axis position displayed by the MI-4190 is the location feedback issued by the linear encoder. The linear encoder uses a magnetic scale that has a series of very high accuracy marks. At one location of the linear encoder travel, there is a defined “index home” position.

This encoder provides exceptional precision, with a scale resolution of 10μm. The encoder measures arc length around the circumference of the guide track. This arc length measurement is then converted to an elevation angle measurement in the MI-4190 controller. The resulting angular resolution is 0.0001°.

To provide a repeatable index, the elevation axis is equipped with a magnetic “home” switch. This switch consists of the index magnet and a magnetic pickup that moves with the carriage. This pickup sends a TTL signal when it reaches either edge of the index magnet. To obtain a highly repeatable home position we always approach the index magnet from the same side when homing.

Limit switches are installed on the scanner as a safety measure. When they actuate, they block power to the axis drive motor. The limit switches are mounted at either end of the arc.

The RF cables and wiring for the scanner are fed through a cable chain around the arch to the scanner cable junction box. This junction box contains terminal blocks that join the system cables to the interface bulkhead connectors.

The wiring module allows these Spherical Scanners to be operated using an MI-4190 Series Controller. The MI-4190 is made up of two electronic chassis: the controller unit, and the power amplifier unit. The controller unit contains the computer that calculates the controlling commands for the scanner. The power amplifier unit contains the amplifiers that supply power to the motors.

The MI-4190 Positioner Controller can be used to move the scanner through manual operator commands. Using the MI-3000 host computer, a user can program continuous scans and raster scans.

5. RESULTS WITHOUT CORRECTION

For the lower frequency regime -- up to 3 GHz -- alignment of the guide plates alone provides adequate positioning accuracy to yield excellent pattern measurements.

An example of verification results reported earlier [3,6] is shown in Fig. 6 below. It is an azimuth pattern of a radar antenna made on two different near-field ranges. As a baseline for comparison, cylindrical near-field measurements were made on the outdoor cylindrical near-field antenna range operated by Alenia-Marconi Systems on the Isle of Wight, United Kingdom. The three test frequencies for the pattern comparisons were centered at 3 GHz. Then using the newly constructed indoor spherical near-field range also operated by Alenia-Marconi Systems on the Isle of Wight – Fig. 5 – spherical near-field measurements were made. The result was the comparison of Fig. 6.

As is evident from the photograph, the travel of the carriage for this first system is less than a full 180 degrees of motion. For the purposes of this first set of measurement requirements, only 130 degrees of motion was needed. Of course a full 360 degrees was provided in the travel for the azimuthal axis.

The positioning accuracy achieved with this scanner can be summarized as follows in Table 1 below.TT

Table 1: Probe Positioning Accuracy

Probe Path Radius	+/- 0.33 mm (.013 in) 0.11 mm RMS (.004 in)
Angular Accuracy (Theta Accuracy)	+0.0058 / -0.0025 deg 0.0019 deg RMS
Phi Accuracy as a Function of Theta	+/- 0.0087 deg 0.0034 deg RMS

.

The use of the rotator that was a part of the radar afforded the opportunity to employ continuous azimuthal scanning in data acquisition. This enabled the time for data acquisition to be approximately 1 hour.

The antenna used for these tests was a "banana peel" reflector with a very narrow-beam azimuth pattern (1.5 degrees) and a very wide-beam (9 degree) elevation pattern. The expected comparison is summarized in Table 2.

Table 2:
Expected Error Signal Between Ranges

Sidelobe Level (dB)	CNF Equivalent Error Signal Level (dB)	SNF Equivalent Error Signal Level (dB)	Expected Equivalent Error Signal Level (dB)
-30	-51	-55	-47
-40	-55	-55	-49
-50	-61	-55	-51

A histogram generated from the pattern comparison showed that 96.7% of the pattern discrepancies corresponded to a stray signal below –45 dB.

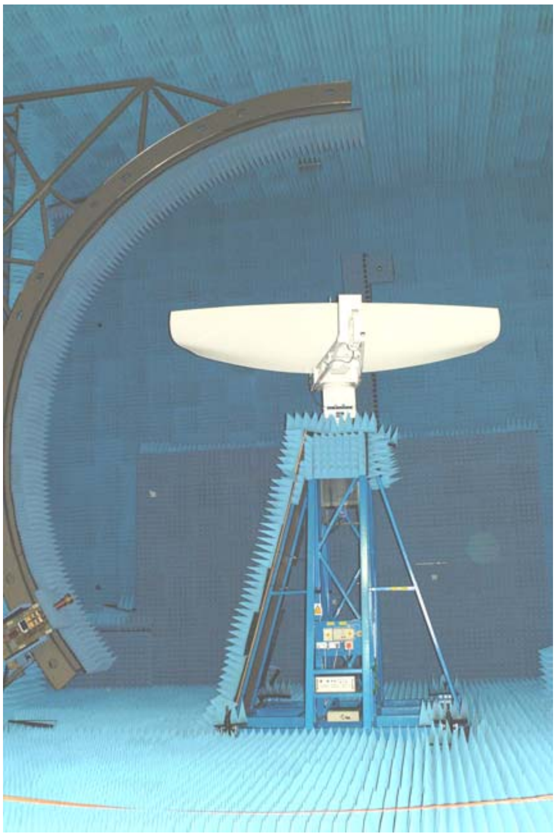

Fig. 5. Photograph of Antenna with Rotator Plus Arch.

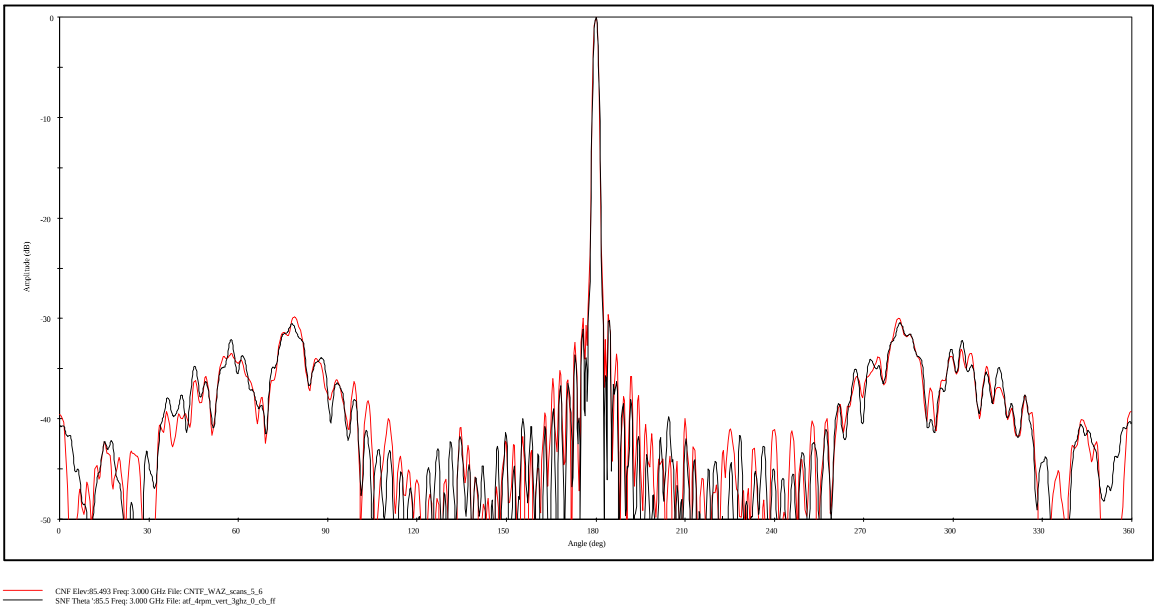

Fig. 6. Comparison Between Far-Field Patterns Derived From Outdoor Cylindrical Near-Field and Indoor Spherical Near-Field Scanning (50 dB Vertical Full Scale, 360 degrees Horizontal Full Scale)

6. POSITION CORRECTION

On a second spherical arch range, to increase the maximum frequency at which the spherical near-field system can be used, we have incorporated an additional error-correction mechanism into the circular scanner. This system was designed to apply position corrections in each of three directions:

1. A rotation about the elevation axis ($\Delta\theta$),
2. A translation along the radial direction (ΔR)
3. A translation along the direction normal to the plane of the scan circle (ΔP).

The $\Delta\theta$ correction was accomplished using the existing elevation axis drive train. ΔR and ΔP corrections were accomplished using a pair of orthogonal linear actuators that were mounted on the probe carriage (Fig. 7, Fig. 8).

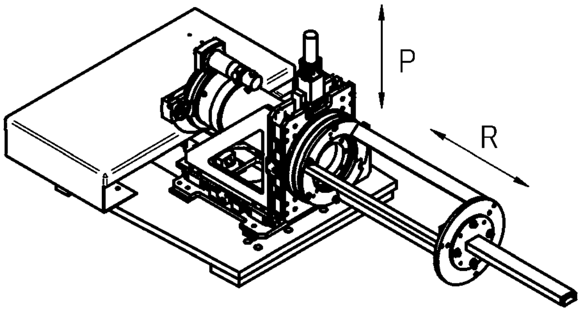

Fig. 7: The Error Correction Stage

The error terms that were used to generate corrections were based on an error map. This map was constructed using direct measurements of the path of the RF probe aperture as it moves around the scan circle. These measurements were taken by first mounting the retro-reflecting corner mirror target of the tracking laser interferometer [8] at the probe aperture location, then moving the probe carriage through its full range of scan motion. Points were recorded at elevation angle increments of 1.0 degree.

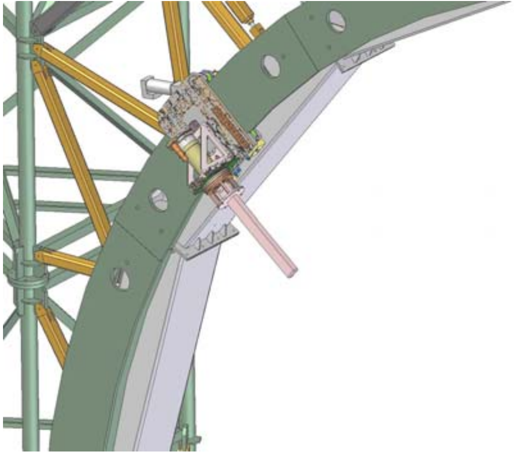

Fig. 8: The Error-Correction Stage Mounted on the Carriage

For each elevation angle position of the carriage, correction of probe tip position was performed in each of three directions: along the radial direction, along a direction normal to the plane of the arc, and along a direction within the plane of the arc. This was accomplished by use of an error map.

The error map was stored as point data in the Model MI-4193 Position Controller that was used to control the circular scanner axes. Correction terms for elevation positions that were between data points were calculated using linear interpolation between the adjacent data points. As the probe carriage moved around the semi-circular arc, real-time adjustments were made by th econtroller to each of the three corrected axes.

7. THE SCANNING SYSTEM

To form a complete antenna range for testing of antennas, the arch must be augmented by an azimuthal rotary positioner. The azimuth axis must be aligned with the elevation axis of the arch to form an axis pair that is intersecting and orthogonal. A perspective view of the two axes along with the antenna undergoing test is shown below in Fig. 9.

Alignment of the azimuth and arch-elevation axes was performed with a Tracking Laser Interferometer. [8] The alignment accuracy was consistent with the highest frequency for which the range is to be used. The second of the ranges on which the arch was installed had a highest frequency of operation of 45 GHz. The corresponding free space wavelength was therefore 0.66 cm (0.26 in). In the error budget for the range for example, an intersection distance of approximately 0.11 wavelength was used. At 45 GHz this required that 0.067 cm (0.03 in) was to be used as the upper limit on axis non-intersection distance.

Once aligned, the range was first checked out using an X-Band flat plate antenna that represented an 18 inch diameter aperture formed by a waveguide slotted array. Please see Fig. 10 for a photograph of the flat plate antenna mounting.

To check for consistency of measurements, two hemispherical scans were made of the antenna in two different orientations on the range: One with the main beam at the north pole and one with the main beam at the equator. Then, corresponding principal planes from the two complete scans were plotted as an overlay and compared. The result is shown in Fig. 11 below. Examination of the comparison reveals that the worst case equivalent stray signals are at approximately –45 dB and the typical equivalent stray signal at –55 dB to –60 dB.

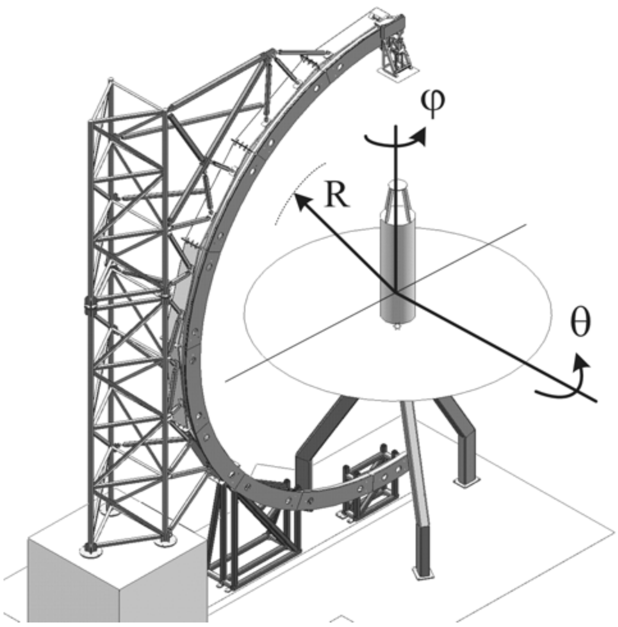

Fig. 9. Perspective View of Spherical Near-Field Arch Scanning System

Fig. 10. A Small 18 in diameter Flat Plate Array Mounted on the Spherical Near-Field Scanner Close to the Point of Axis Intersection

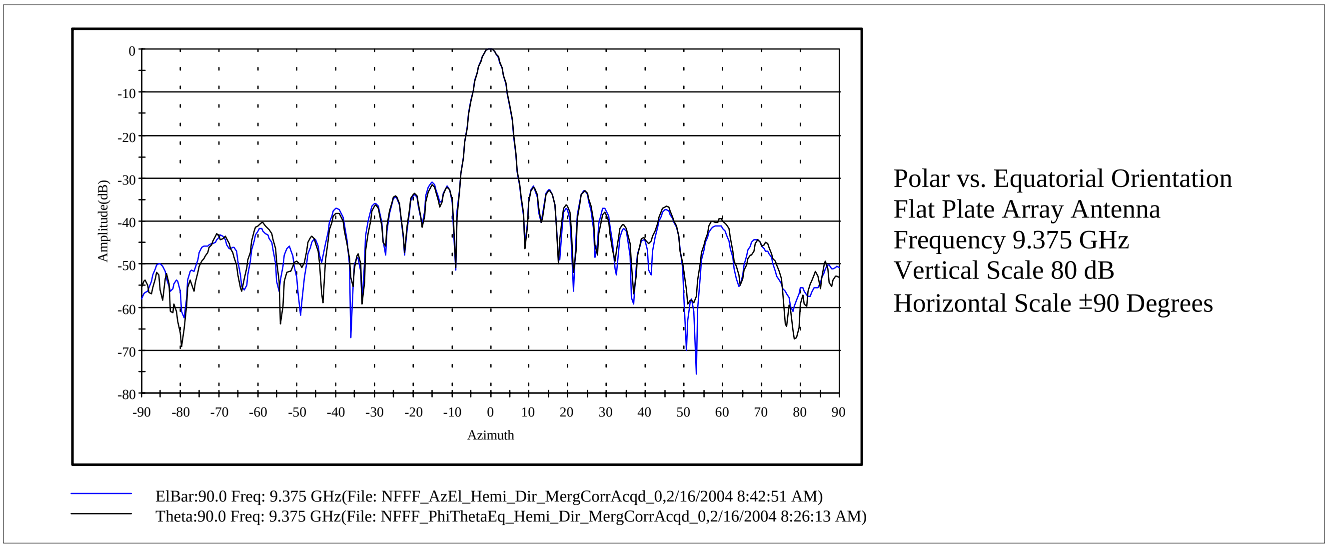

Fig. 11. A Comparison of Principal Plane Patterns for a Flat Plate Slotted Array Oriented (A) Main Beam at North Pole and (B) Main Beam at Equator

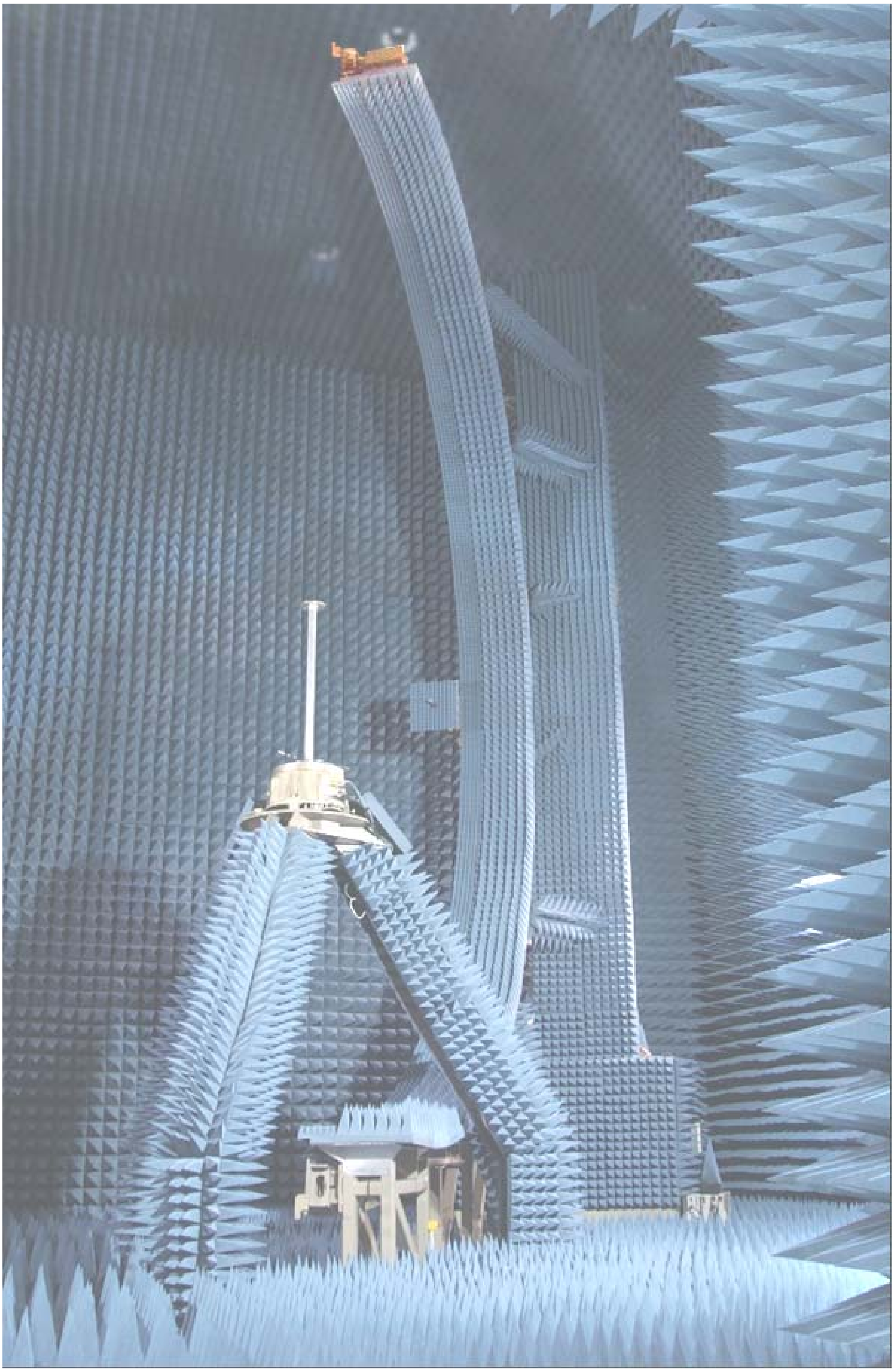

Fig. 12. Photograph of 180 Degree Circular Arch for Spherical Near-Field Antenna Measurements

8. SUMMARY

These ranges assembled by MI Technologies represent an advanced and technologically superior antenna range, built on a larger scale than earlier arch ranges. [9] RF electronics have been delivered with frequency coverage from 2 GHz up through 45 GHz. The modular and distributed RF electronics are capable of making gain measurements either by the gain comparison method or by the range insertion loss method in any individual waveguide band between 2 and 45 GHz. These frequency limits can readily be extended to 1 GHz and 60 GHz. The antenna sizes measured so far include reflector diameters and minimum sphere diameters as large as 100 inches at 45 GHz. This case corresponds to an electrical size, D/λ, of approximately 381 and sampling increments of λ/D of 2.62 mR or 0.15 degrees.

This second of the arch scanning systems reported here has a nominal measurement radius of 188 inches. It is capable of measuring antennas of minimum sphere diameters up to $D_{min} \leq 2(188 \text{ in}) = 31.3$ ft or approximately 10 m. Antenna diameters up to 6 m or 12 ft have been confirmed so far. The azimuth positioner can support vertical loads as large as 20K lbs or 9.07 kGm.

For the case of a 100 inch diameter reflector antenna operating at frequencies near 45 GHz, it has been demonstrated the the system is capable of collecting a complete 4π SR of near-field data, gathering 3 frequency data set, in approximately 12 hours. This was accomplished by rotating the antenna under test continuously at 3 RPM, saving the time normally allocated to stopping the scan axis while the step axis is moved to its next position. In this case the record increment was set to 0.18 degrees.

In constructing and assembling these ranges we paid close attention to error budgets. The second arch, for mm waves, was constructed to yield an accuracy of ±0.5 dB in gain and ± 1.0 dB on the first sidelobe that is 20 dB below the peak. The dynamic range of the measurement system was greater than 70 dB. The gain of an 100 inch diameter aperture antenna at 45 GHz is on the order of +60 dBi or more. The far-field patterns from the peak to the back lobe level varies from this value of +60 dBi down to –20 dBi on the far-out sidelobes and back lobes -- a range of 80 dB.

An arch range that operates at millimeter wavelengths must necessarily have excellent control over temperature. The chamber depicted in Fig. 12 occupies a volume approximately 45 ft (W) by 45 ft (L) by 50 ft (H). A temperature control better than ±0.8 degrees C or ±1.5 degrees F was required.

Given the potential frequency coverage of 1 to 60 GHz the solid-angular coverage of 4π SR and the advanced near-field scanning features such as continuous scanning employed, we believe that this second range is one of the most generally capable antenna test ranges built to date.

9. REFERENCES

1. J. S. Hollis, T. J. Lyon, L. Clayton, Jr. *Microwave Antenna Measurements*, 3rd Edition, Scientific-Atlanta, Inc. Atlanta, GA, USA 1985.

2. J. E. Hansen, Editor, *Spherical Near-Field Antenna Measurements*, Peter Peregrinus, Ltd., London, United Kingdom, 1988.

3. D. W. Hess, An Expanded Approach to Spherical Near-Field Uncertainty Analysis, Digest, Antenna Measurement Techniques Association 24th Annual Meeting & Symposium, Cleveland, OH, pp 495-500, 2002.

4. J.A. Fordham, J. Proctor, D. Kremer, Precision Positioner Alignment Techniques for Spherical Near-Field Antenna Measurements Using Laser Alignment Tools, Digest, Antenna Measurement Techniques Association 22nd Annual Meeting & Symposium, pp. 317-320, Philadelphia, PA 2000.

5. S. Pierce, C. Liang, Alignment of a Large Spherical Near-Field Scanner Using a Tracking Laser Interferometer, Antenna Measurement Techniques Association 23rd Annual Meeting & Symposium, pp.. 64-69, Irvine, CA 2003.

6. J. Fordham, M. Scott, Antenna Pattern Comparison Between an Outdoor Cylindrical Near-Field Test facility and an Indoor Spherical Near-Field Test Facility, Antenna Measurement Techniques Association 23rd Annual Meeting & Symposium, Irvine, CA pp. 285-290, 2003.

7. S. Pierce, J. Langston, Implementation of a Geometric-Error-Correction System for Extremely High Probe Position Accuracy in Spherical Near-Field Scanning, Antenna Measurement Techniques Association 23rd Annual Meeting & Symposium, Atlanta, GA, pp. 93-97, 2004.

8. *SMX Tracker 4000,4500 Operator's Guide*, SMX Corporation, Spatial MetriX Corp., As of 2002, See FARO Technologies, Inc., Lake Mary FL 32746 USA.

9. SEE Institut Fresnel, Campus de Saint Jérôme, Marseille Cedex 20, France, http://www.loe.u-3mrs.fr/rf.htm